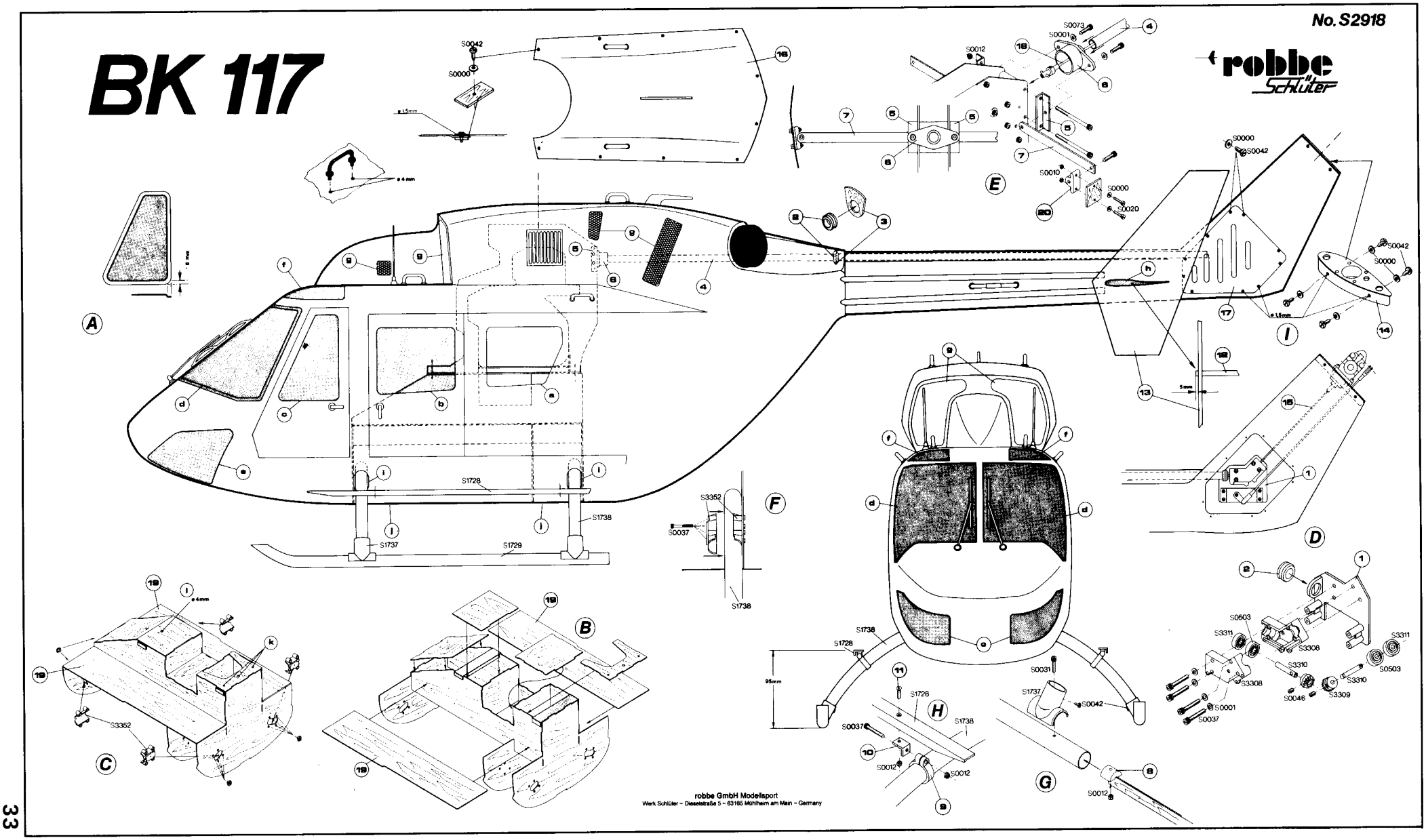
BK 117
No. S2918
robbe
Schlüter
A
B
C
D
E
F
G
H
I
S0042
S0000
S0073
S0001
S0012
S0010
S0020
S0037
S0031
S0503
S0046
S3311
S3308
S3310
S3309
S3352
S1728
S1729
S1737
S1738
95mm
robbe GmbH Modellsport
Werk Schlüter – Dieselstraße 5 – 63165 Mühlheim am Main – Germany